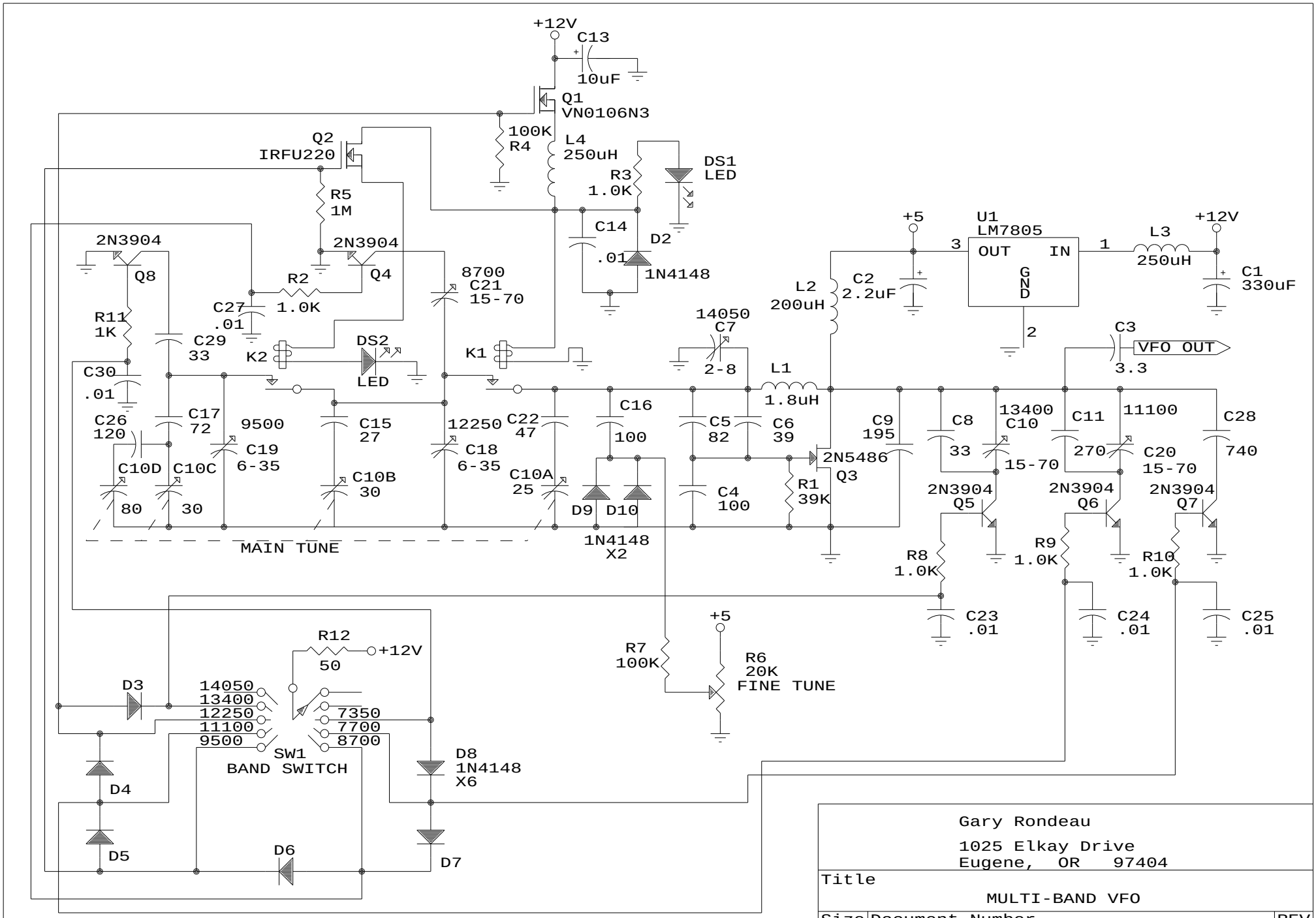

Gary Rondeau
1025 Elkay Drive
Eugene, OR 97404

Title	MULTI-BAND VFO	
Size A	Document Number	REV
Date: January 4, 2004	Sheet of 1	